Konami inc.

Centuri inc.

CIRCUS CHARLIE

™

SERVICE MANUAL

901-2169

CIRCUS CHARLIE

OPTIONAL DIP SWITCH SETTINGS

A. Dip Switch No.1 (8P Dip Switch)

Credits

Coin	Plays	SW1	SW2	SW3	SW4	SW5	SW6	SW7	SW8
1	1	Off	Off	Off	Off	Off	Off	Off	Off
1	2	On	Off	Off	Off	On	Off	Off	Off
1	3	Off	On	Off	Off	Off	On	Off	Off
1	4	On	On	Off	Off	On	On	Off	Off
1	5	Off	Off	On	Off	Off	Off	On	Off
1	6	On	Off	On	Off	On	Off	On	Off
1	7	Off	On	On	Off	Off	On	On	Off
2	1	On	On	On	Off	On	On	On	Off
2	3	Off	Off	Off	On	Off	Off	Off	On
2	5	On	Off	Off	On	On	Off	Off	On
3	1	Off	On	Off	On	Off	On	Off	On
3	2	On	On	Off	On	On	On	Off	On
3	4	Off	Off	On	On	Off	Off	On	On
4	1	On	Off	On	On	On	Off	On	On
4	3	Off	On	On	On	Off	On	On	On
Free Play		On	On	On	On	On	On	On	On

B: Dip Switch No.2 (8P Dip Switch)

1. Number Of Clowns

Number	SW1	SW2
○ 3	Off	Off
4	On	Off
5	Off	On
7	On	On

2. Game Type

Style	SW3	Players
Table	Off	1 or 2 Players
Upright	On	Only 1 Player

3. Bonus Points Setting

First	And Every	SW4	SW5
○ 20,000	70,000	Off	Off
30,000	80,000	On	Off

B. Dip Switch No.2 (continues)

4. Play Difficulty

Option	SW6	SW7
Easy	Off	Off
○ Normal	On	Off
Hard	Off	On
Difficult	On	On

5. Audio Attraction

Sound Mode	SW8
No Sound In Attract Mode	Off
○ Sound In Attract Mode	On

○ Denotes Normal Settings

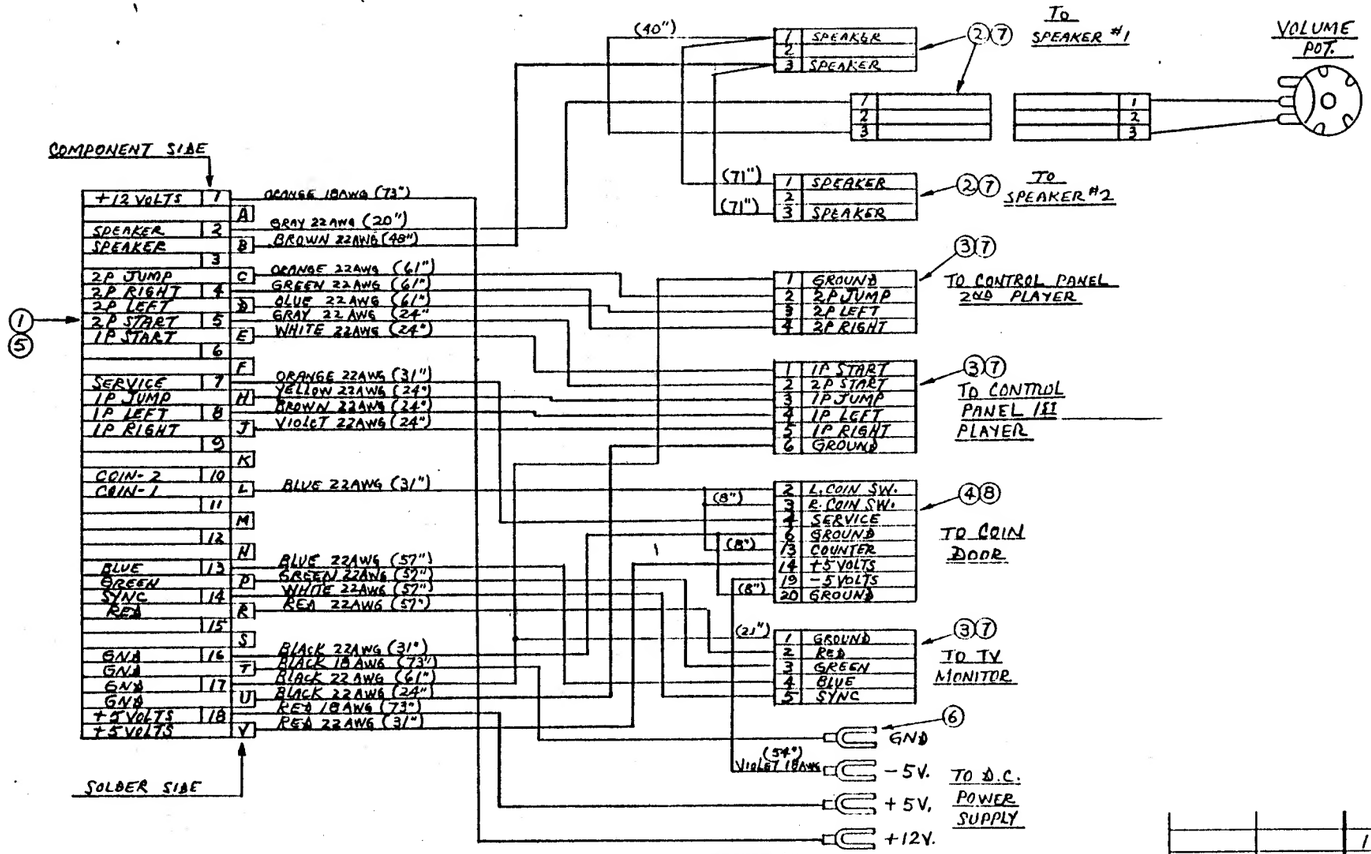

FIGURE 13

QC. APV'D	PROD. APV'D	QTY	ASSEMBLY NO
		1	

REV. LET.	ECN NO.	REVISION	BY
A	4041-01	CHG'ED GRAY WIRE TO BRN, CHG'ED BRN WIRE QTY FRM 24" TO 143", GRAY FRM 274" TO 155"	MJ

TOLERANCES
Unless Otherwise Specified

FRACTIONS	±	1/32
DECIMALS 2 PL	±	.015
DECIMALS 3 PL	±	.005
HOLES	+	.003
	−	.001
ANGLES	±	1/2°
SHT. MET BENDS	±	2°

HIALEAH, FLORIDA 33014

NAME: CPU HARNESS-CIRCUS CHARLIE, C/T

MATL'S. | HEAT TREAT. | FINISH

DWN: MJ. | APP'D: [illegible] | DATE: 12-28-83 | SCALE: X | PART NO. 008-4930 | REV. A

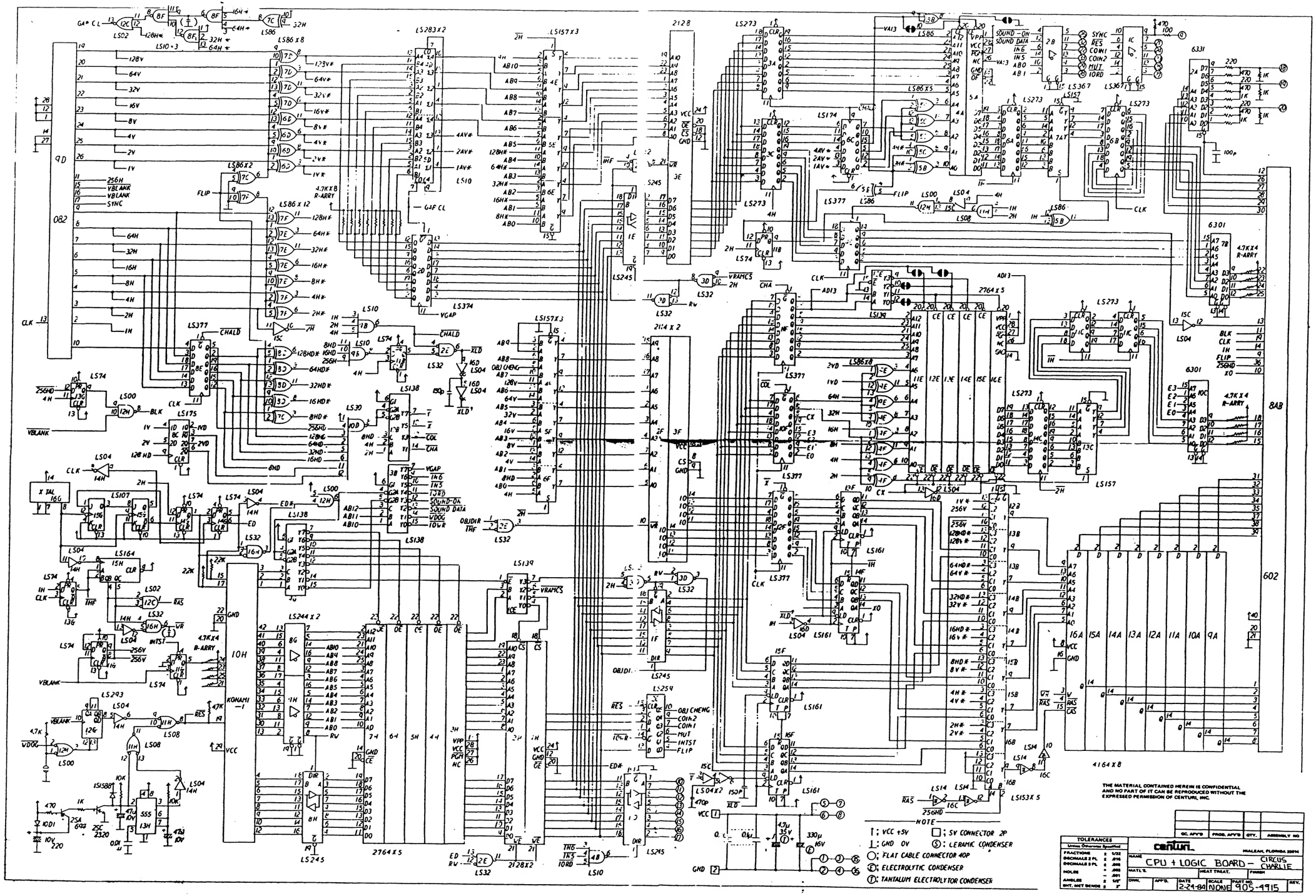

THE MATERIAL CONTAINED HEREIN IS CONFIDENTIAL AND NO PART OF IT CAN BE REPRODUCED WITHOUT THE EXPRESSED PERMISSION OF CENTURI, INC.

QC APV'D	PROD. APV'D	QTY.	ASSEMBLY NO

TOLERANCES
Unless Otherwise Specified
FRACTIONS ± 1/32
DECIMALS 2 PL. ± .016
DECIMALS 3 PL. ± .005
HOLES ± .002
ANGLES ± 1/2°
SHT. MET BENDS ± 2°

centuri
HIALEAH, FLORIDA 33014

NAME: CPU + LOGIC BOARD – CIRCUS CHARLIE

MATL'S | HEAT TREAT. | FINISH

DWN. | APP'D. | DATE 2-24-84 | SCALE NONE | PART NO. 905-4915 | REV.

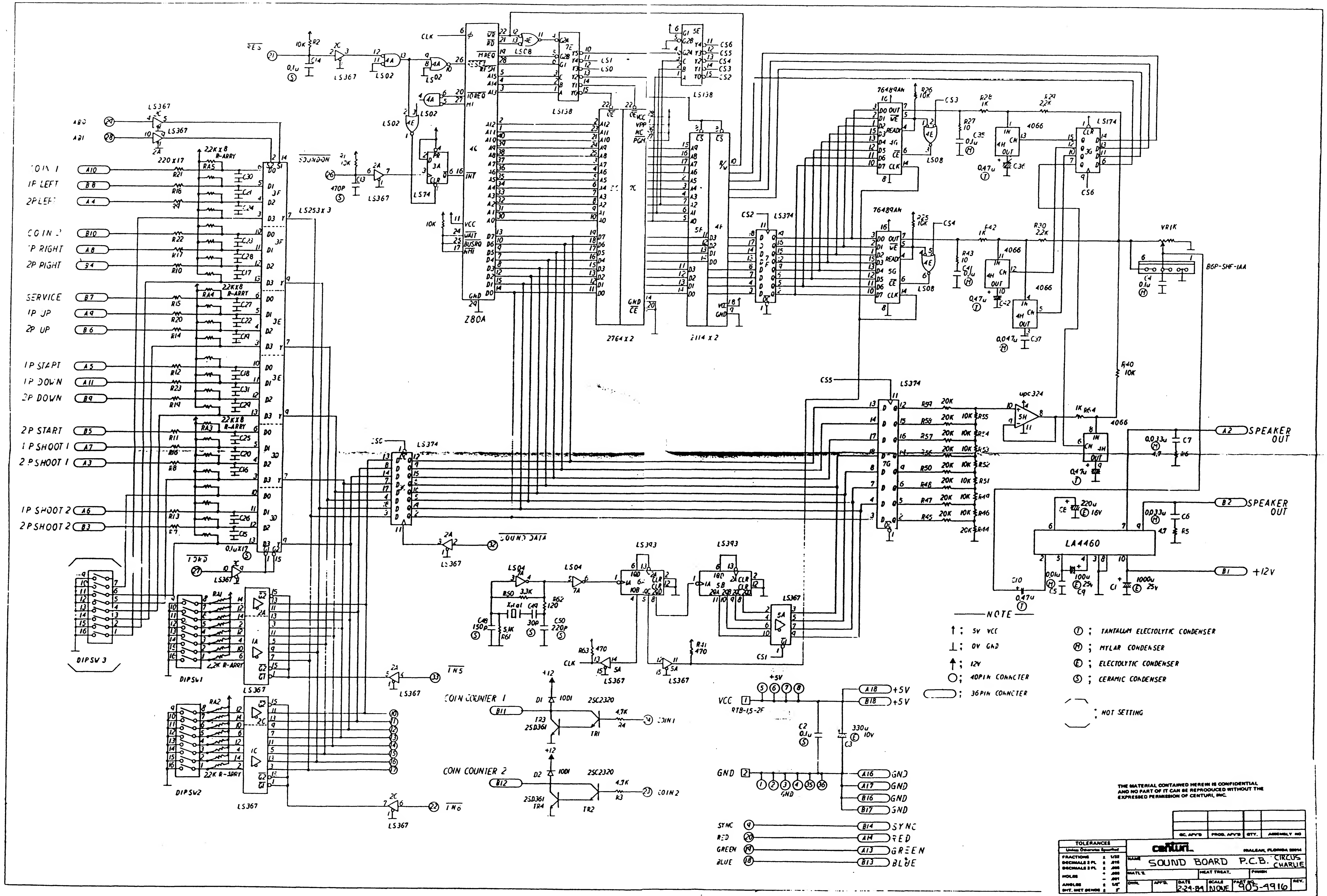

Z80A
2764 x 2
2114 x 2
LS253 x 3
LS374
LS138
LS367
LS393
LA4460
upc324
4066
LS174
76489AN
DIPSW1
DIPSW2
DIPSW3
COIN 1
1P LEFT
2P LEFT
COIN 2
1P RIGHT
2P RIGHT
SERVICE
1P UP
2P UP
1P START
1P DOWN
2P DOWN
2P START
1P SHOOT 1
2P SHOOT 1
1P SHOOT 2
2P SHOOT 2
SOUND DATA
COIN COUNTER 1
COIN COUNTER 2
SPEAKER OUT
+12V
VCC
+5V
GND
SYNC
RED
GREEN
BLUE
86P-SHF-1AA
NOTE
5V VCC
0V GND
12V
40PIN CONNECTER
36PIN CONNECTER
NOT SETTING
TANTALUM ELECTOLYTIC CONDENSER
MYLAR CONDENSER
ELECTOLYTIC CONDENSER
CERAMIC CONDENSER
THE MATERIAL CONTAINED HEREIN IS CONFIDENTIAL AND NO PART OF IT CAN BE REPRODUCED WITHOUT THE EXPRESSED PERMISSION OF CENTURI, INC.
TOLERANCES
centuri
HIALEAH, FLORIDA
NAME
SOUND BOARD P.C.B. CIRCUS CHARLIE
DATE 2-24-84
SCALE NONE
PART NO. 905-4916